OPERATION AND INSTALLATION
操作與安裝

Hardwired remote control for comfort instantaneous water heaters
舒適型即熱式熱水器的有線遙控器

» FB 1 LCD Trend

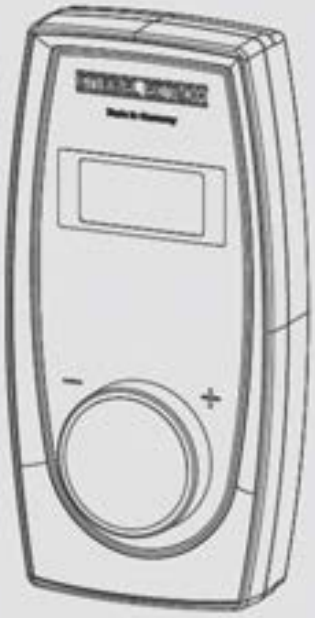

STIEBEL ELTRON

OPERATION

1. General information 2
1.1 Other applicable documents 2
1.2 Safety instructions 2
1.3 Other symbols in this documentation 3
1.4 Units of measurement 3
2. Safety 3
2.1 Intended use 3
2.2 General safety instructions 3
2.3 Test mark 3
3. Appliance description 3
3.1 Operation 3
3.2 Dynamic anti-scalding protection 4
4. Cleaning, care and maintenance 4
5. Troubleshooting 4

INSTALLATION

6. Safety 4
6.1 General safety instructions 4
6.2 Instructions, standards and regulations 4
7. Appliance description 4
7.1 Standard delivery 4
7.2 Required accessories 5
8. Installation 5
8.1 Preparing the control cable 5
8.2 Installing the adaptor assembly in the instantaneous water heater 5
8.3 Installation site 6
8.4 Installing the flush-mounted enclosure 6
8.5 Installing the programming unit 6
8.6 Alternative mounting of the hardwired remote control 6
9. Commissioning 7
9.1 Appliance handover 7
10. Shutdown / removal 7
11. Recommissioning 7
12. Troubleshooting 7
13. Maintenance 7
14. Specification 7
14.1 Dimensions and connections 7
14.2 Data table 7

GUARANTEE

ENVIRONMENT AND RECYCLING

OPERATION

1. General information

The chapter "Operation" is intended for appliance users and qualified contractors.

The chapter "Installation" is intended for qualified contractors.

Notice
Read these instructions carefully before using the appliance and retain them for future reference.
Pass on these instructions to a new user if required.

1.1 Other applicable documents

Operating and installation instructions of the instantaneous water heater

1.2 Safety instructions

1.2.1 Structure of safety instructions

SIGNAL WORD Type of risk
Here, possible consequences are listed that may result from failure to observe the safety instructions.
► Steps to prevent the risk are listed.

1.2.2 Symbols, type of risk

Symbol	Type of risk
	Injury
	Electrocution
	Burns (burns, scalding)

1.2.3 Signal words

SIGNAL WORD	Meaning
DANGER	Failure to observe this information will result in serious injury or death.
WARNING	Failure to observe this information may result in serious injury or death.
CAUTION	Failure to observe this information may result in moderate or minor injury.

1.3 Other symbols in this documentation

Notice
General information is identified by the adjacent symbol.
▶ Read these texts carefully.

Symbol	Meaning
	Property damage (appliance damage, consequential losses and environmental pollution)
	Appliance disposal

▶ This symbol indicates that you have to do something. The action you need to take is described step by step.

1.4 Units of measurement

Notice
All measurements are given in mm unless stated otherwise.

2. Safety

2.1 Intended use

The hardwired remote control is intended for operating the respective instantaneous water heater.

The appliance is intended for domestic use. It can be used safely by untrained persons. The appliance can also be used in non-domestic environments, e.g. in small businesses, as long as it is used in the same way.

Any other use beyond that described shall be deemed inappropriate. Observation of these instructions and of the instructions for any accessories used is also part of the correct use of this appliance.

2.2 General safety instructions

CAUTION Burns
There is a risk of scalding at outlet temperatures in excess of 43 °C.

WARNING Injury
The appliance may be used by children aged 3 and older and persons with reduced physical, sensory or mental capabilities or a lack of experience and know-how, provided that they are supervised or they have been instructed on how to use the appliance safely and have understood the potential risks. Children must never play with the appliance. Cleaning and user maintenance must not be carried out by children without supervision.

2.3 Test mark

See type plate in the standard delivery.

3. Appliance description

The hardwired remote control enables the instantaneous water heater to be operated from a distance. The data transfer between the hardwired remote control and the instantaneous water heater takes place via a cable connection with the help of the built-in adaptor assembly.

3.1 Operation

You can set the required hot water outlet temperature of the instantaneous water heater using the temperature selector on the hardwired remote control.

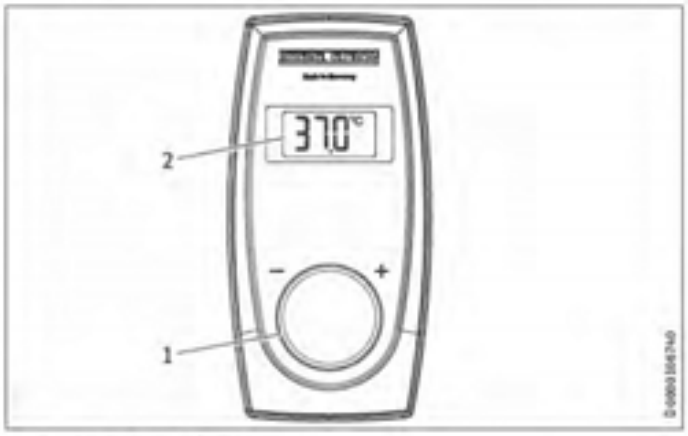

1 Temperature selector
2 Display

▶ Turn the temperature selector to the required target temperature. The outlet temperature of the instantaneous water heater may differ from the set temperature depending on the type of appliance.

Notice
If the outlet temperature is not high enough when the draw-off valve is fully open and the temperature selector is set to maximum, then more water is flowing through the instantaneous water heater than can be heated by the heating system (appliance working at maximum output).
▶ Reduce the water volume until the preferred temperature delivery is achieved.

3.2 Dynamic anti-scalding protection

To reduce the risk of scalding, the hardwired remote control is equipped with dynamic anti-scalding protection, which takes effect when the hardwired remote control is used in conjunction with a unit that has a programming unit with display.

Function

The programming unit that is operated first (the hardwired remote control or the programming unit on the appliance) is given priority for the next draw-off, i.e. the target temperature can only be reduced or increased to a maximum of 43 °C by the other programming unit.

Activation

To activate the dynamic anti-scalding protection, a temperature selection must be made either on the unit or on the hardwired remote control by pressing the operating controls. If water starts being drawn off during the next 2 minutes, the dynamic anti-scalding protection remains active during the draw-off and until 2 minutes after the end of the draw-off.

4. Cleaning, care and maintenance

▶ Never use abrasive or corrosive cleaning agents. A damp cloth is sufficient for cleaning the unit.

5. Troubleshooting

See chapter "Troubleshooting" in the operating and installation instructions of the instantaneous water heater.

INSTALLATION

6. Safety

Only a qualified contractor should carry out installation, commissioning, maintenance and repair of the appliance.

6.1 General safety instructions

We guarantee trouble-free function and operational reliability only if original accessories and spare parts intended for the appliance are used.

6.2 Instructions, standards and regulations

Notice
Observe all applicable national and regional regulations and instructions.

7. Appliance description

The hardwired remote control is intended for comfort instantaneous water heaters. The hardwired remote control allows the instantaneous water heater to be operated from an external location in the kitchen or bathroom. The hardwired remote control can also be used for instantaneous water heaters mounted on a self-supporting frame.

The hardwired remote control may only be installed in conjunction with the flush-mounted enclosure, see chapter "Required accessories".

The hardwired remote control operates with extra low voltage.

7.1 Standard delivery

The following are part of the standard delivery of the hardwired remote control:

- Programming unit
- Adaptor assembly with fastening screw
- Type plate
- Label

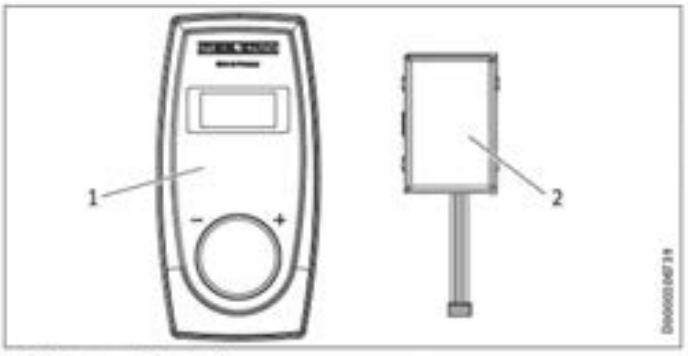

1 Programming unit
2 Adaptor assembly

7.2 Required accessories

Flush-mounted enclosure to accommodate the hardwired remote control FB 1 LCD Trend with frame and screw:

- A-Plus (HK) Group Ltd. - 222423N

8. Installation

WARNING Electrocution
Only qualified contractors are permitted to open the appliance and work on the open appliance.

Property damage
Electrostatically sensitive components
Observe the generally applicable guidelines for handling electrostatically sensitive components and take suitable protective measures.

- ▶ Isolate the instantaneous water heater from the power supply.
- ▶ For details on opening and closing the instantaneous water heater, see the operating and installation instructions of the instantaneous water heater.

8.1 Preparing the control cable

- ▶ Use a control cable without metallic screening, see chapter "Specification".
- ▶ Route the control cable through the cable grommet that is not used for the electrical connection of the appliance, at the top or bottom of the instantaneous water heater.
- ▶ To do this, cut off a cone of the cable grommet that corresponds to the cable cross-section of the control cable.

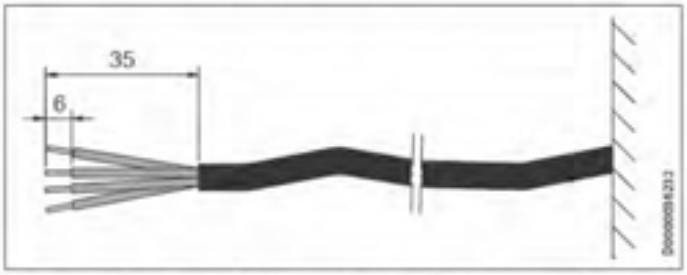

- ▶ Prepare the control cable for the adaptor assembly. Determine the required cable length for the selected cable grommet.
- ▶ If using the lower cable grommet, lay the control cable along the right side of the back panel to the adaptor assembly.

8.2 Installing the adaptor assembly in the instantaneous water heater

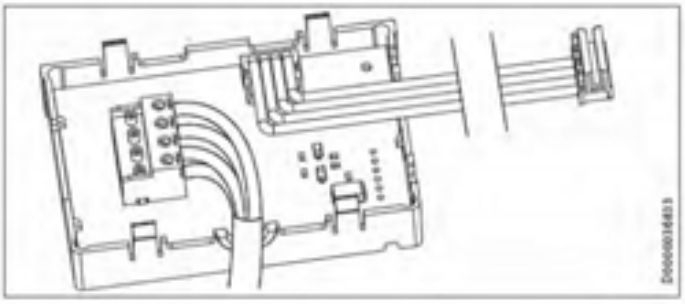

- ▶ Open the adaptor assembly enclosure by pressing the four locking tabs on the side.
- ▶ Connect the control cable to the terminal. Make sure that the wires on the cable terminal of the adaptor assembly and the cable terminal of the programming unit are correctly connected.
- ▶ Make sure that the cable terminal is correctly seated on the PCB (screw connections for the control cable face the centre of the PCB).
- ▶ Route the control cable through the cable grommet opening of the adaptor enclosure.
- ▶ Close the enclosure.

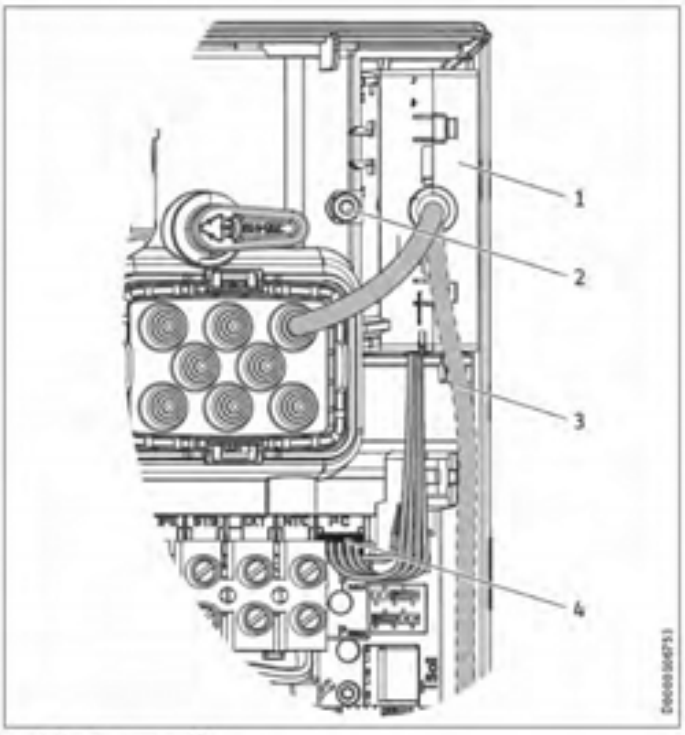

1 Adaptor assembly
2 Fixing screw
3 Routing the control cable when using the lower cable grommet
4 Slot I²C

- ▶ Fit the adaptor assembly plug into slot I²C on the edge of the instantaneous water heater PCB.
- ▶ Mount the adaptor assembly in the top right-hand corner of the back panel of the instantaneous water heater and secure it with the enclosed screw.
- ▶ Fit the appliance cover to the instantaneous water heater.

8.3 Installation site

- Mount the hardwired remote control vertically on the flush box. As an alternative, the device may also be mounted over a wall recess. For the maximum distance to the instantaneous water heater, see chapter "Specification".

8.4 Installing the flush-mounted enclosure

- Stick the type plate (included in the standard delivery) onto the flush-mounted enclosure.



- Insert the flush-mounted enclosure (see chapter "Required accessories") flush with the wall, passing the control cable through the cable grommet in the flush-mounted enclosure. Align the flush-mounted enclosure horizontally.
- Secure the flush-mounted enclosure with the flush box screws.

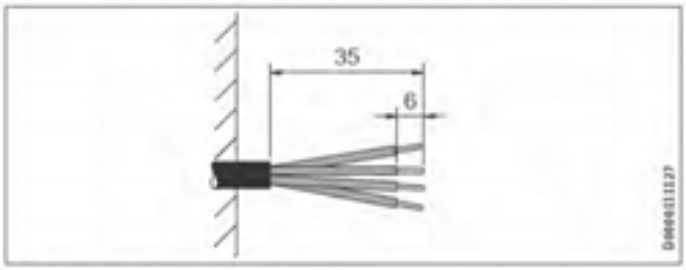

- Prepare the control cable.

8.5 Installing the programming unit

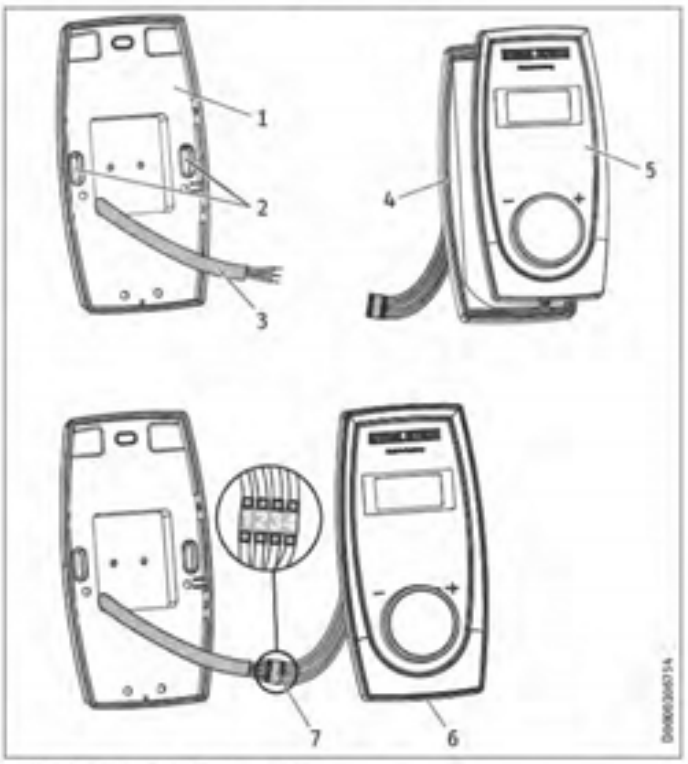

1 Flush-mounted enclosure
2 Screws for wall mounting, not included in the standard delivery
3 Control cable
4 Frame
5 Programming unit
6 Fixing screw
7 Cable terminal

- Snap the frame and the programming unit into place. All four locking tabs must engage.
- Connect the control cable at the cable terminal on the programming unit. Ensure that the conductors are correctly assigned at the cable terminal.
- Plug the cable terminal onto the two pins of the flush-mounted enclosure.
- Snap the frame into the flush-mounted enclosure. All locking tabs must engage.
- Fit the frame to the flush-mounted enclosure.

Notice
If the programming unit of the instantaneous water heater is only equipped with a temperature selector, stick the sticker (included in the standard delivery) on or next to the programming unit of the instantaneous water heater.

8.6 Alternative mounting of the hardwired remote control

Alternatively, you can also mount the hardwired remote control on a wall without the flush box.

Installation aperture of the installation wall: 47 x 57 mm

- Fit the flush-mounted enclosure directly onto the installation wall above the installation aperture using suitable screws, see chapter "Installing the programming unit".

9. Commissioning

WARNING Electrocution
Commissioning may only be carried out by a qualified contractor in accordance with safety regulations and the instructions supplied with the instantaneous water heater.

9.1 Appliance handover

- ▶ Explain the appliance function to users and familiarise them with how it works.
- ▶ Make users aware of potential dangers, especially the risk of scalding.
- ▶ Hand over these instructions as well as the instructions for any accessories being used.

10. Shutdown / removal

Notice
Make sure that the set temperature on the hardwired remote control does not show "OFF".

- ▶ Isolate all poles of the instantaneous water heater from the power supply.

11. Recommissioning

See chapter "Commissioning" in the operating and installation instructions of the instantaneous water heater.

12. Troubleshooting

Problem	Cause	Remedy
Programming unit without temperature indicator.	The connecting cable is not plugged in.	Reconnect the cable.
	The connecting cable is faulty.	Check and replace the connecting cable, if required.
The temperature cannot be adjusted.	The programming unit is faulty.	Check the programming unit and replace if necessary.
The instantaneous water heater is not responding to temperature adjustments.	The cable connection to the instantaneous water heater is faulty.	Check and replace the cable connection, if required.

13. Maintenance

WARNING Electrocution
Before any work on the appliance, disconnect all poles from the power supply.

14. Specification

14.1 Dimensions and connections

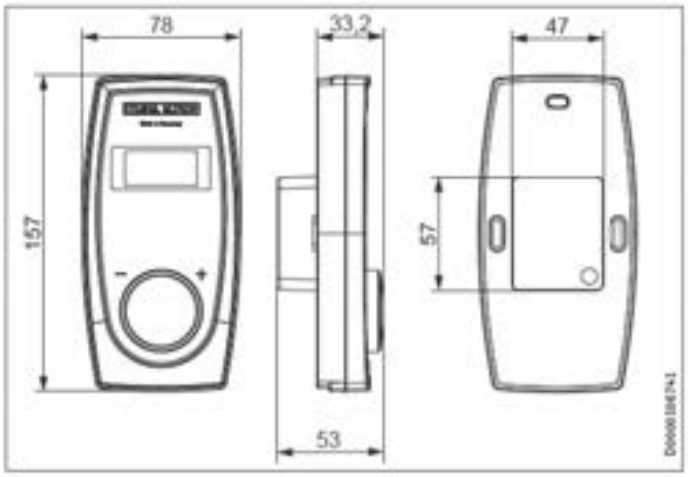

14.2 Data table

		FB 1 LCD Trend
		204214
Electrical data		
Extra low voltage	V	5
Versions		
Control cable (telephone line)	Type	J-YY 2x2x0.6
Max. control cable length	m	15
Installation type		Flush-mounted
Casing material		PS/ABS
IP rating		IP 24
Colour		white
Application limits		
Temperature setting range	°C	Off, 20 - Tmax
Dimensions		
Height	mm	157
Width	mm	78
Depth	mm	53
Weights		
Weight (excl. flush-mounted enclosure)	kg	0.250

Guarantee

The guarantee conditions of our German companies do not apply to appliances acquired outside of Germany. In countries where our subsidiaries sell our products a guarantee can only be issued by those subsidiaries. Such guarantee is only granted if the subsidiary has issued its own terms of guarantee. No other guarantee will be granted.

We shall not provide any guarantee for appliances acquired in countries where we have no subsidiary to sell our products. This will not affect warranties issued by any importers.

Environment and recycling

We would ask you to help protect the environment. After use, dispose of the various materials in accordance with national regulations.

操作
1. 一般提示 8
1.1 參考文件 8
1.2 安全提示 8
1.3 本文件中的其他標記 9
1.4 尺寸單位 9
2. 安全 9
2.1 按規定使用 9
2.2 一般安全提示 9
2.3 檢測標誌 9
3. 裝置說明 9
3.1 操作 9
3.2 動態防燙保護功能 9
4. 清潔、保養與維修 9
5. 故障排除 9
安裝
6. 安全 10
6.1 一般安全提示 10
6.2 規範、標準與規定 10
7. 裝置說明 10
7.1 其他配件 10
7.2 必要配件 10
8. 裝配 10
8.1 請準備一條控制導線 10
8.2 將適配器組件安裝於即熱式熱水器中。 11
8.3 裝配地點 11
8.4 安裝隱蔽式殼體 11
8.5 安裝操作面板 12
8.6 有線遙控器的備選裝配方式 12
9. 調試 12
9.1 移交裝置 12
10. 停用/拆卸 12
11. 重新調試 12
12. 排除故障 12
13. 保養 13
14. 技術參數 13
14.1 尺寸和接口 13
14.2 資料表 13
保用
環境與回收

操作

1. 一般提示

「操作」章節是為裝置使用者與專業人員而撰寫的。

「安裝」章節是為技術人員而撰寫的。

提示
使用前請仔細閱讀本說明書並妥善保管。
如有需要，請將說明書轉交予其他使用者。

1.1 參考文件

即熱式熱水器的操作與安裝說明

1.2 安全提示

1.2.1 安全提示的結構

訊號詞，危險類型
以下是不遵守安全提示可能會產生的後果。
▶ 以下是解除危險的措施。

1.2.2 符號，危險類型

符號	危險類型
	受傷
	觸電
	燒傷 （燒傷、燙傷）

1.2.3 訊號詞

訊號詞	意思
危險	此等指示如未有按指示處理，或會導致重傷或死亡。
警告	此等指示如未有按指示處理，或會導致重傷或死亡。
小心	此等指示如未有按指示處理，或會導致中等程度傷害或輕傷。

1.3 本文件中的其他標記

提示
透過旁邊的符號標記識認一般提示。
▶ 請仔細閱讀提示內容。

符號	意思
!	財產損失 (裝置損壞、間接損失及環境損害)
	裝置棄置處理

▶ 此符號提示您必須進行的操作。 將分步說明必需進行的操作。

1.4 尺寸單位

提示
如未另行註明, 所有尺寸單位均為毫米。

2. 安全

2.1 按規定使用

有線遙控器是專為操作相應的即熱式熱水器而設。

裝置是為家庭環境使用而設。 可以由未接受指導的人員安全操作。 如在非家庭環境使用, 例如在小企業中, 如以相同方式使用, 亦可使用本裝置。

如作其他用途或者超出此使用範圍則視為不當使用。 正確使用亦包括遵守本說明書及所使用附件的說明書。

2.2 一般安全提示

小心燒傷
出水口溫度如高於 43 °C, 或會引致燙傷。

受傷警告
年滿 3 週歲之幼童以及有身體、感知或精神障礙人士, 或缺乏經驗及知識之人士需於他人監督下使用本裝置, 或於接受本裝置之安全使用培訓並了解可能發生的危險情況後, 方可使用本裝置。 禁止孩童要玩本裝置。 孩童不可在未有他人監督的情況下清潔裝置和進行使用者保養。

2.3 檢測標誌

請參閱產品提供的其他配件中的型號銘牌。

3. 裝置說明

本有線遙控器可遙控操作即熱式熱水器。 透過纜線連線的內置適配器組件, 有線遙控器可與即熱式熱水器之間互傳數據。

3.1 操作

透過有線遙控器上的溫度調節旋鈕, 可隨心設定即熱式熱水器的熱水出水溫度。

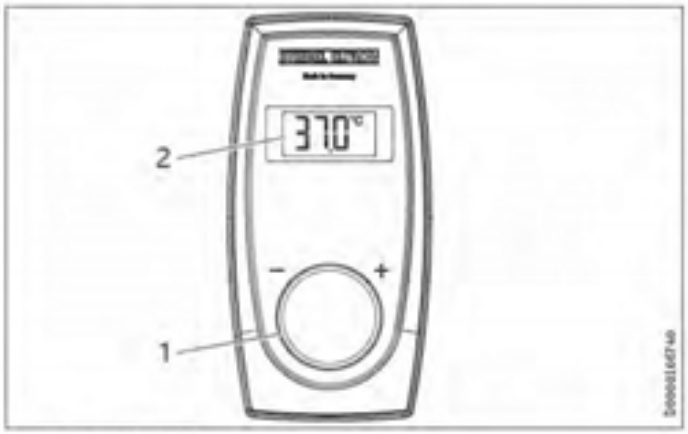

1 溫度調節旋鈕
2 顯示屏

▶ 將溫度調節旋鈕轉至所需的給定溫度。 機型不同, 即熱式熱水器熱水出水溫度的給定溫度可能有所不同。

提示
如完全開啟了分流閥且處於最高溫度設定仍沒有達到足夠高的出水溫度, 說明流經即熱式熱水器的水流量高於加熱系統的最大加熱能力 (裝置以最高功率運作)。
▶ 請一直降低水量, 直到達到所需的溫度為止。

3.2 動態防燙保護功能

為降低燙傷危險, 有線遙控器帶有動態防燙保護功能, 當有線遙控器連接到設有顯示屏操作面板的裝置時, 將可啟用該功能。

功能

首先操作的操作面板 (有線遙控器或裝置上的操作面板) 在下一個供水過程中有優先權, 也就是說, 其他操作面板僅可降低給定溫度或將其升至最高 43 °C。

啟用

啟用動態防燙保護功能時, 必須透過操作裝置上或有線遙控器上的操作元件來選擇溫度。 如在接下來的 2 分鐘內開始供水, 動態防燙保護功能會在供水期間和供水結束後最多 2 分鐘內運作。

4. 清潔、保養與維修

▶ 請勿使用磨蝕性或腐蝕性的清潔劑。 使用濕布保養與清潔裝置即可。

5. 故障排除

請參閱即熱式熱水器的操作與安裝說明中的「排除故障」一章。

安裝

6. 安全

僅允許技術人員安裝、調試以及保養和維修裝置。

6.1 一般安全提示

本公司僅保證使用指定原裝附件和原裝備件的裝置的功能和操作安全。

6.2 規範、標準與規定

提示
請注意所有國家及地區的規範及規定。

7. 裝置說明

本有線遙控器專為舒適型即熱式熱水器而設。 本有線遙控器可從廚房或浴室等外部位置操作即熱式熱水器。 本有線遙控器亦可讓即熱式熱水器安裝於假牆內。

本有線遙控器僅可與隱蔽式殼體同時安裝，請參閱「必要配件」一章。

有線遙控器以低電壓運行。

7.1 其他配件

隨附於有線遙控器的物品:

- 操作面板
- 適配器組件與緊固螺栓
- 銘牌
- 標籤

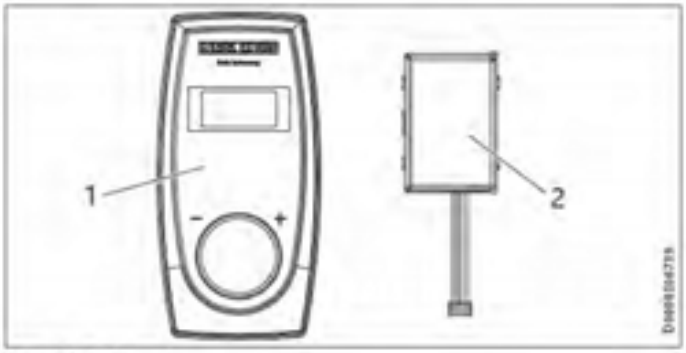

1 操作面板
2 適配器組件

7.2 必要配件

隱蔽式殼體用於容納有線遙控器 FB 1 LCD Trend 及框架與螺栓:

- A-Plus (HK) Group Ltd. - 222423N

8. 裝配

觸電危險
僅允許專業技術人員打開裝置或在已打開的裝置上作業。

財產損失
靜電敏感組件
請遵守通用的靜電敏感組件處理規範，並採取適當的保護措施。

- ▶ 請中斷已妥善安裝的即熱式熱水器的電源。
- ▶ 如需打開及關閉即熱式熱水器的說明，請參閱即熱式熱水器的操作與安裝說明。

8.1 請準備一條控制導線

- ▶ 請使用不帶金屬屏蔽層的控制導線，並參閱「技術參數」一章。
- ▶ 將控制導線穿過非裝置電氣接口專用的纜線套管，其位於即熱式熱水器的頂部或底部。
- ▶ 要將控制導線穿過非裝置電氣接口專用的纜線套管，請根據控制導線的纜線截面，剪去纜線套管的尾端。

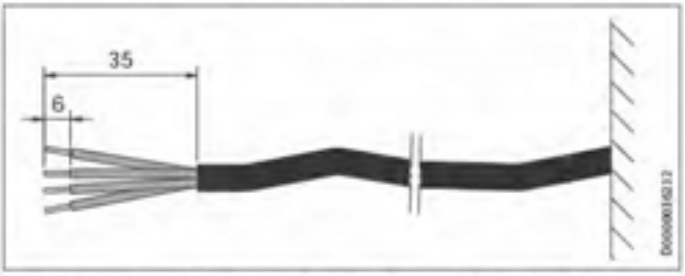

- ▶ 為適配器組件準備一條控制導線。 確定所選纜線套管所需的纜線長度。
- ▶ 如使用底部纜線套管，請將控制導線沿背板右側佈設至適配器組件。

8.2 將適配器組件安裝於即熱式熱水器中。

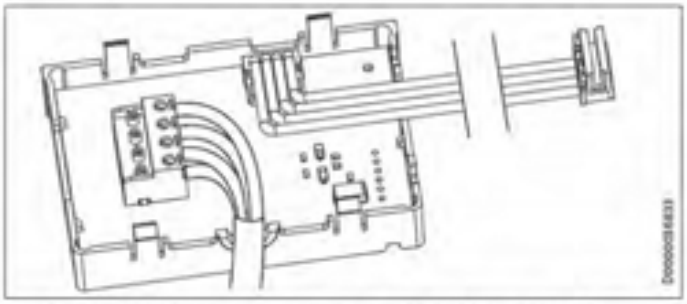

- ▶ 按下側面的四個卡扣，將適配器組件的外殼打開。
- ▶ 將控制導線連接至纜線接線尾端。 注意適配器組件的纜線接線尾端以及操作面板的纜線接線尾端上導線的正確連接。
- ▶ 注意將纜線接線尾端正確地固定於線路板上 (控制導線的螺紋接頭指向印刷線路板中央)。
- ▶ 將控制導線穿過適配器外殼上的穿線孔。
- ▶ 關閉裝置外殼。

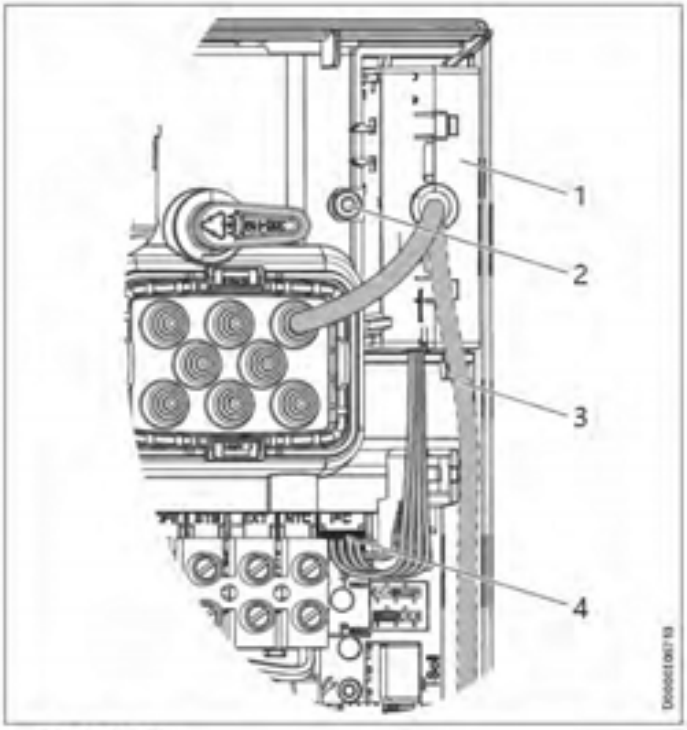

1 適配器組件
2 緊固螺栓
3 使用底部纜線套管時的控制導線佈設
4 插槽 I²C

- ▶ 將適配器組件的插頭插在即熱式熱水器線路板邊緣的插槽 I²C 上。
- ▶ 將適配器組件安裝在即熱式熱水器背板的右上角，並使用隨附的螺栓緊固。
- ▶ 安裝即熱式熱水器的裝置蓋罩。

8.3 裝配地點

- ▶ 將有線遙控器垂直安裝於隱蔽式插座上， 亦可裝配在牆體的凹槽上。 如需了解距即熱式熱水器與遙控器之間的最大距離，請參閱「技術參數」一章。

8.4 安裝隱蔽式殼體

- ▶ 將產品提供的其他配件中的銘牌粘於隱蔽式殼體上。



- ▶ 將隱蔽式殼體 (參閱「必要配件」一章) 裝於牆上，確保與牆壁齊平，將控制導線穿入纜線套管引入隱蔽式殼體。 將隱蔽式殼體水平調平。
- ▶ 使用隱蔽式插座的螺栓緊固隱蔽式殼體。

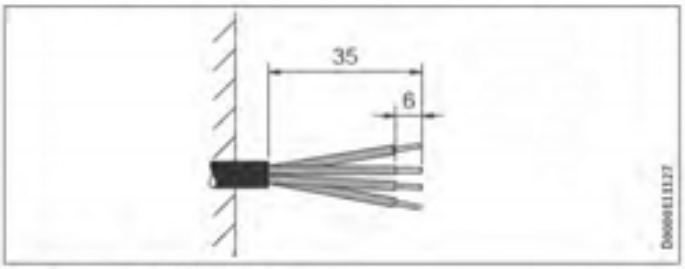

- ▶ 請準備一條控制導線。

8.5 安裝操作面板

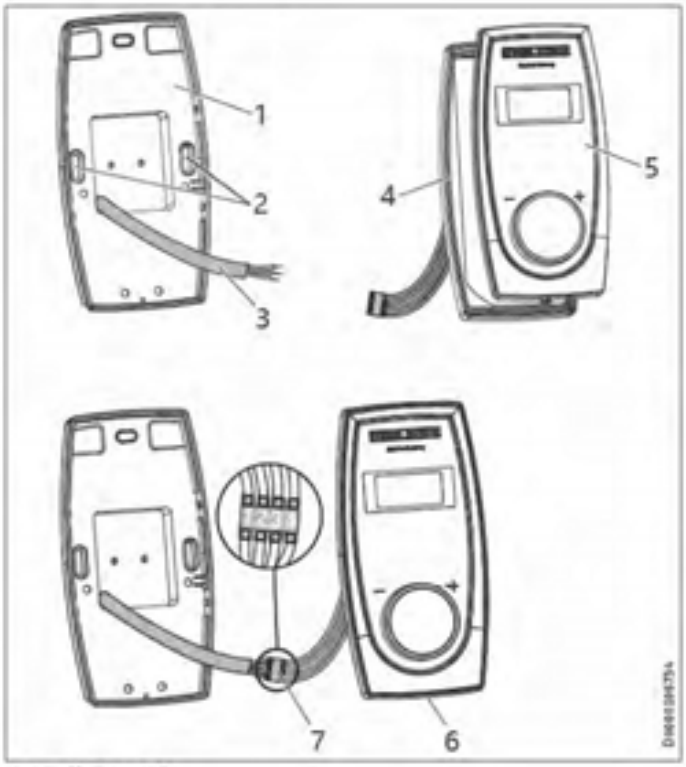

1 隱蔽式殼體
2 產品的其他配件不含緊固牆體的螺栓
3 控制導線
4 框架
5 操作面板
6 緊固螺栓
7 纜線接線尾端

- ▶ 將框架與操作面板卡入到位。 同時必須扣緊所有四個卡扣。
- ▶ 將控制導線連接至操作面板的纜線接線尾端。 注意正確連接纜線接線尾端的導線。
- ▶ 將纜線接線尾端插到隱蔽式殼體的兩根銷釘上。
- ▶ 將框架與隱蔽式殼體卡入到位。 同時必須扣緊所有卡扣。
- ▶ 將框架擰到隱蔽式殼體上。

提示
如即熱式熱水器的操作面板僅配有一個溫度調節旋鈕，請將產品提供的其他配件中的標籤貼在即熱式熱水器的操作面板上或靠近操作面板的位置處。

8.6 有線遙控器的備選裝配方式

如沒有隱蔽式插座，亦可將有線遙控器安裝於牆上。

牆體安裝口: 47 x 57 毫米

- ▶ 使用合適的螺栓將隱蔽式殼體直接安裝在安裝孔上方的牆體上，請參閱「安裝操作面板」一章。

9. 調試

觸電危險
僅允許專業技術人員依照即熱式熱水器的安全規範與說明進行調試。

9.1 移交裝置

- ▶ 請向使用者解釋裝置的功能，使其熟悉裝置的使用方法。
- ▶ 提醒使用者可能發生的危險，尤其是燙傷危險。
- ▶ 請提供本說明書，並提供適當的配件說明。

10. 停用/拆卸

提示
請注意，如有線遙控器上的顯示的定溫度並非「OFF」(關閉)，

- ▶ 請切斷即熱式熱水器與電源所有電極的連接。

11. 重新調試

請參閱即熱式熱水器的操作與安裝說明中的「調試」一章。

12. 排除故障

問題	原因	排除故障
操作面板沒有溫度顯示。	電源線未插接。	請重新插好電源線。
	電源線損壞。	請檢查電源線，按需要進行更換。
無法調節溫度。	操作面板損壞。	請檢查操作面板，按需要進行更換。
即熱式熱水器對溫度調節沒有反應。	即熱式熱水器的纜線連接器損壞。	檢查纜線連接器，按需要進行更換。

13. 保養

觸電危險
在進行所有作業時，請完全斷開裝置的電源。

14. 技術參數

14.1 尺寸和接口

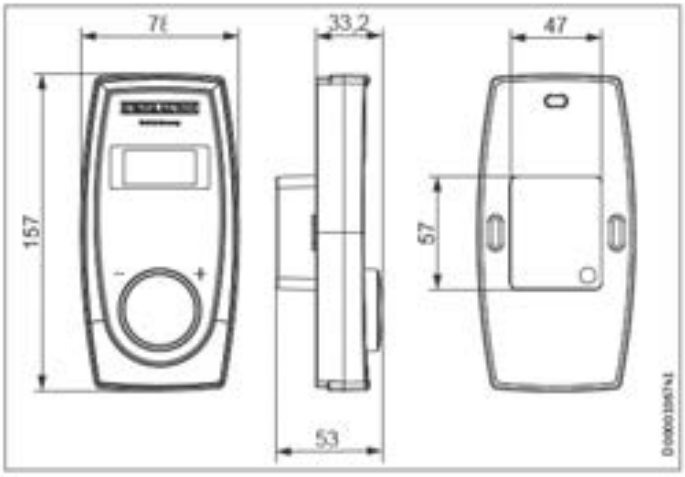

14.2 資料表

		FB 1 LCD Trend
		204214
電氣參數		
低電壓	V	5
規格		
控制導線 (電話線)	型號	J-YY 2x2x0.6
控制導線最大長度	m	15
裝配方式		暗裝
外殼材料		PS/ABS
防護等級 (IP)		IP 24
顏色		白色
使用上限		
溫度設定範圍	°C	關閉, 20 - Tmax
尺寸設計		
高度	毫米	157
寬度	毫米	78
深度	毫米	53
重量		
重量 (不含隱蔽式殼體)	公斤	0.250

保用

本德國本土公司之保用條款不適用於德國境外購買的裝置。 具體而言，如本公司於海外國家/地區開設子公司並銷售本公司之產品，則保用服務將僅由該子公司負責提供。僅當該子公司發佈其保用條款後，方可享有保用服務， 否則恕不提供保用服務。

對於本公司未有開設子公司售賣本公司產品的國家/地區，本公司概不提供任何保用服務。 由進口商提供的類似保用服務則不受此限。

環境與回收

保護環境，人人有責。 請依照當地的國家法規進行處置廢料。

Deutschland
STIEBEL ELTRON GmbH & Co. KG
Dr.-Stiebel-Straße 33 | 37603 Holzminden
Tel. 05531 702-0 | Fax 05531 702-480
info@stiebel-eltron.de
www.stiebel-eltron.de

Verkauf Tel. 05531 702-110 | Fax 05531 702-95108 | info-center@stiebel-eltron.de
Kundendienst Tel. 05531 702-111 | Fax 05531 702-95890 | kundendienst@stiebel-eltron.de
Ersatzteilverkauf www.stiebel-eltron.de/ersatzteile | ersatzteile@stiebel-eltron.de

Australia
STIEBEL ELTRON Australia Pty. Ltd.
294 Salmon Street | Port Melbourne VIC 3207
Tel. 03 9645-1833 | Fax 03 9644-5091
info@stiebel-eltron.com.au
www.stiebel-eltron.com.au

Austria
STIEBEL ELTRON Ges.m.b.H.
Gewerbegebiet Neubau-Nord
Margaritenstraße 4 A | 4063 Hörsching
Tel. 07221 74600-0 | Fax 07221 74600-42
info@stiebel-eltron.at
www.stiebel-eltron.at

Belgium
STIEBEL ELTRON bvba/sprl
't Hofveld 6 - D1 | 1702 Groot-Bijgaarden
Tel. 02 42322-22 | Fax 02 42322-12
info@stiebel-eltron.be
www.stiebel-eltron.be

China
STIEBEL ELTRON (Tianjin) Electric Appliance Co., Ltd.
Plant C3, XEDA International Industry City
Xiqing Economic Development Area
300385 Tianjin
Tel. 022 8396 2077 | Fax 022 8396 2075
info@stiebeleltron.cn
www.stiebeleltron.cn

Czech Republic
STIEBEL ELTRON spol. s r.o.
Dopravákú 749/3 | 184 00 Praha 8
Tel. 251116-111 | Fax 235512-122
info@stiebel-eltron.cz
www.stiebel-eltron.cz

Finland
STIEBEL ELTRON OY
Kapinakuja 1 | 04600 Mäntsälä
Tel. 020 720-9988
info@stiebel-eltron.fi
www.stiebel-eltron.fi

France
STIEBEL ELTRON SAS
7-9, rue des Selliers
B.P 85107 | 57073 Metz-Cédex 3
Tel. 0387 7438-88 | Fax 0387 7468-26
info@stiebel-eltron.fr
www.stiebel-eltron.fr

Hungary
STIEBEL ELTRON Kft.
Gyár u. 2 | 2040 Budaörs
Tel. 01 250-6055 | Fax 01 368-8097
info@stiebel-eltron.hu
www.stiebel-eltron.hu

Japan
NIHON STIEBEL Co. Ltd.
Kowa Kawasaki Nishiguchi Building 8F
66-2 Horikawa-Cho
Saiwai-Ku | 212-0013 Kawasaki
Tel. 044 540-3200 | Fax 044 540-3210
info@nihonstiebel.co.jp
www.nihonstiebel.co.jp

Netherlands
STIEBEL ELTRON Nederland B.V.
Daviottenweg 36 | 5222 BH 's-Hertogenbosch
Tel. 073 623-0000 | Fax 073 623-1141
info@stiebel-eltron.nl
www.stiebel-eltron.nl

New Zealand
Stiebel Eltron NZ Limited
61 Barrys Point Road | Auckland 0622
Tel. +64 9486 2221
info@stiebel-eltron.co.nz
www.stiebel-eltron.co.nz

Poland
STIEBEL ELTRON Polska Sp. z O.O.
ul. Działkowa 2 | 02-234 Warszawa
Tel. 022 60920-30 | Fax 022 60920-29
biuro@stiebel-eltron.pl
www.stiebel-eltron.pl

Russia
STIEBEL ELTRON LLC RUSSIA
Urzhumskaya street 4,
building 2 | 129343 Moscow
Tel. +7 495 125 0 125
info@stiebel-eltron.ru
www.stiebel-eltron.ru

Slovakia
STIEBEL ELTRON Slovakia, s.r.o.
Hlavná 1 | 058 01 Poprad
Tel. 052 7127-125 | Fax 052 7127-148
info@stiebel-eltron.sk
www.stiebel-eltron.sk

South Africa
STIEBEL ELTRON Southern Africa (PTY) Ltd
30 Archimedes Road
Wendywood
Johannesburg, 2090
Tel. +27 10 001 85 47
info@stiebel-eltron.co.za
www.stiebel-eltron.co.za

Switzerland
STIEBEL ELTRON AG
Industrie West
Gass 8 | 5242 Lupfig
Tel. 056 4640-500 | Fax 056 4640-501
info@stiebel-eltron.ch
www.stiebel-eltron.ch

Thailand
STIEBEL ELTRON Asia Ltd.
469 Moo 2 Tambol Klong-Jik
Amphur Bangpa-In | 13160 Ayutthaya
Tel. 035 220088 | Fax 035 221188
info@stiebeleltronasia.com
www.stiebeleltronasia.com

United Kingdom and Ireland
STIEBEL ELTRON UK Ltd.
Unit 12 Stadium Court
Stadium Road | CH62 3RP Bromborough
Tel. 0151 346-2300 | Fax 0151 334-2913
info@stiebel-eltron.co.uk
www.stiebel-eltron.co.uk

United States of America
STIEBEL ELTRON, Inc.
17 West Street | 01088 West Hatfield MA
Tel. 0413 247-3380 | Fax 0413 247-3369
info@stiebel-eltron-usa.com
www.stiebel-eltron-usa.com

STIEBEL ELTRON

4 017213 493594

Irrtum und technische Änderungen vorbehalten! | Subject to errors and technical changes! | Sous réserve d'erreurs et de modifications techniques! | Onder voorbehoud van vergissingen en technische wijzigingen! | Salvo error o modificación técnica! | Excepto erro ou alteração técnica | Zastrzeżone zmiany techniczne i ewentualne błędy | Omyly a technické změny jsou vyhrazeny! | A muszaki változtatások és tévedések jogát fenntartjuk! | Отсутствие ошибок не гарантируется. Возможны технические изменения. | Chyby a technické zmeny sú vyhradené!

Stand 07.14

A 349359-45191-9833
B 349358-45191-9833